REV.	SPECIFICATION	ECN NO.	APPD.

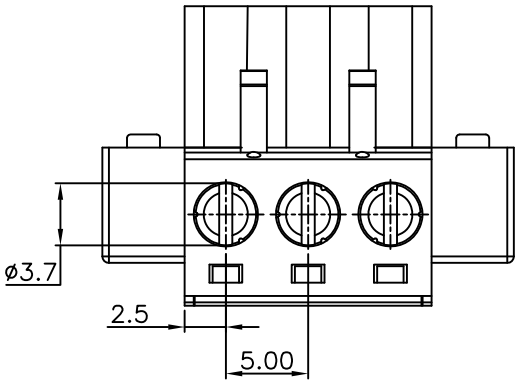

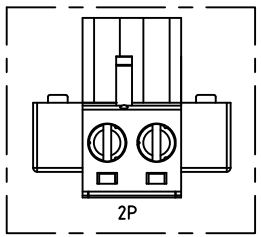

Material:
Housing: Thermoplastic Polyester Glass Filled UL94V-0.
Female Contacts: Copper Alloy, Tin Plated.
Clamp: Copper Alloy, Ni Plated.
Screw: Metal, Zinc Plated, M3.
Flange Screw: Metal, Zinc Plated, M2.5.

Electrical Characteristics:
Voltage Rating: 300V
Current Rating: 20A
Solid Wire(AWG): 12-24
Stranded Wire(AWG): 12-24
Torque: 5 Lb-In
Wire Strip Length: 7-8mm
Withstanding Voltage: 1.6KV
Operating Temperature: -40°C~+115°C

***RoHS Compliant**

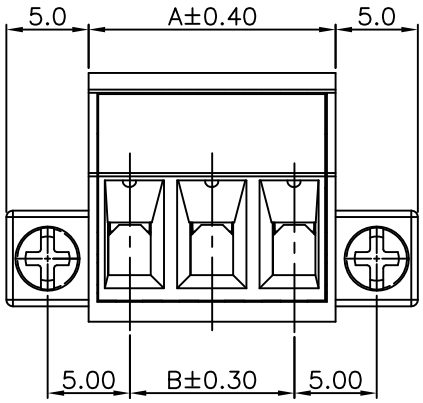

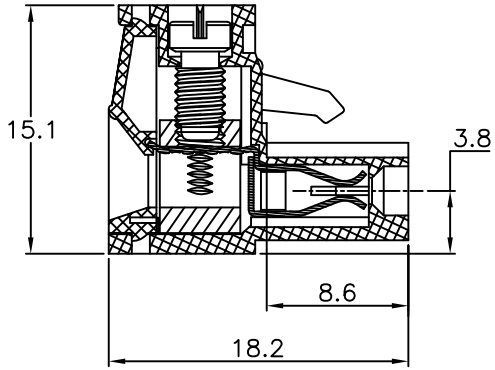

8933-	F	151182	G	AA	DD	xx	B
Series	F:Pitch 5.0mm	Manufacturing Code	G:Green B:Black Y:Grey U:Blue	AA:Slotted "–"Screw	DD:With Flange With Hook Contact on Down Side	No. of Positions	B:Bulk Package

Position	2 Thre 24
Dimension	
A	No. of PositionsX5.0
B	(No. of Positions–1)X5.0

Tolerances	Dwg. No.	8933D02022	Title: 8933–F Series 5.0mm Terminal Block (8500–xxFTR11–05)	OUPIIN ELECTRONIC(KUNSHAN) CO., LTD.
X= ±0.50	Projection			P/N: 8933–F151182GAADDxxB
.X= ±0.30	Unit mm	Scale 1:1		SHEET 1/1 Ver.No. X1
.XX= ±0.15	Drawn By	Vic Lyu01/08'15	① 780	