REV.	SPECIFICATION	ECN NO.	APPD.
R2		ECN250449	

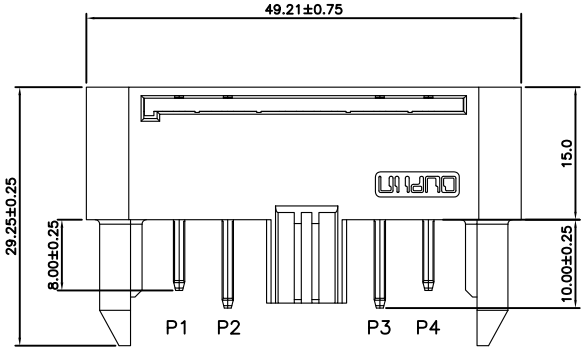

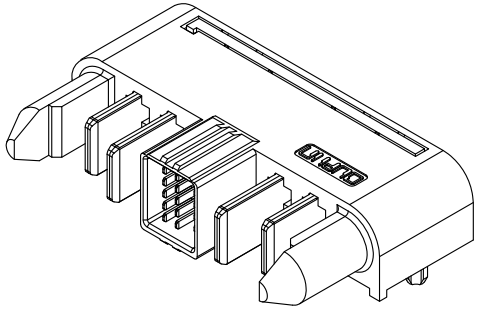

Material and Plating:

Housing: LCP, UL94V-0 , Black.
Molding: LCP, UL94V-0 , Beige and Black.
Stopper: LCP, UL94V-0 , Black.
Power Contacts: High Conductivity Copper .
Au+Pd/Ni or Gold Plated on Contact Area and 80u"
Tin Plated on Press Fit over Nickel 50u".
Signal Contacts : Brass .
Au+Pd/Ni or Gold Plated on Contact Area and 80u"
Tin Plated on Press Fit over Nickel 50u".

Electrical Characteristics:

Current Rating: Signal Pin 2.5 AMP.
Power Pin 60 AMP.
Dielectric Withstanding Voltage: Power Pin :DC 1500V For 1 minute.
Signal Pin :DC 500V For 1 minute.
Insulator Resistance: 5000MΩ min.
Contact Resistance: Signal Pin 30mΩ max.
Power Pin 0.3mΩ max.
Operating Temperature: -40°C ~+125°C .

***RoHS Compliant**

Notes 1:

L: Low Power---PCB Mount 3.0mm Pitch
D: DC Power---PCB Mount 5.5mm Pitch
A: AC Power---PCB Mount 7.5mm Pitch

Notes 2:

A3,B3,C3,D3,E3: Signal Pin to The Top Distance is 1.92mm.
Other Signal: Signal Pin to The Top Distance is 0.92mm.
P2,P3 Power Contact Length is 10.0mm.
P1,P4 Power Contact Length is 8.0mm.

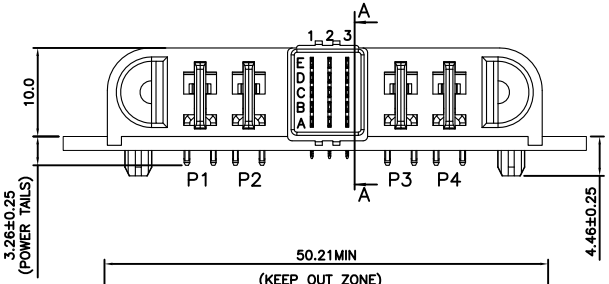

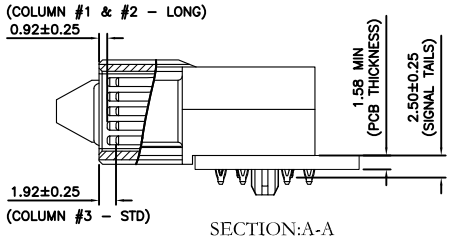

SECTION:A-A

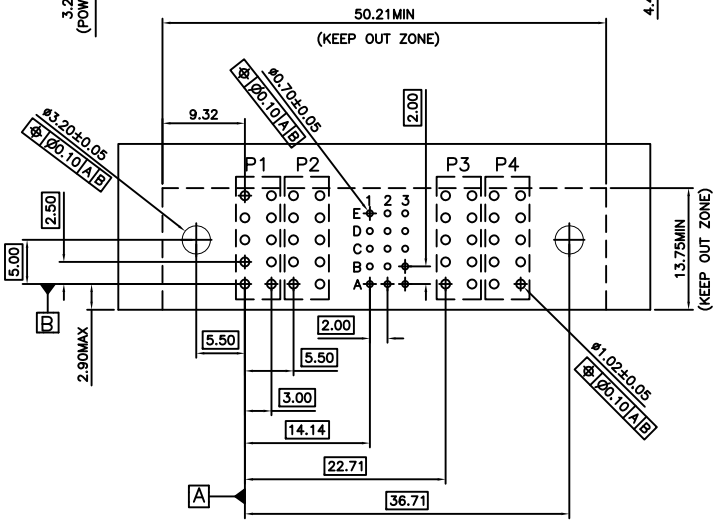

P.C.Board Layout
(Tolerance:±0.05)

9395- 1 D02 S15 D02 B 7 1 P P G2 A -A012

- Series: 9395
- 1: Male Right Angle
- D02: Blank:Without Contact; Power Contact: Axx, Dxx , Lxx; No. of position
- S15: Blank:Without Contact; Signal Contact: Sxx; No. of position
- D02: Blank:Without Contact; Power Contact: Axx, Dxx , Lxx; No. of position
- B: C: Selective Gold Plated; B: Dip Tin Plated; Contact Au+Pd/Ni Plated
- 7: 30u"
- 1: With Rib
- P: Press Fit Type
- P: With Post
- G2: Guides Side
- A: Tray Package
- -A012: Internal Code

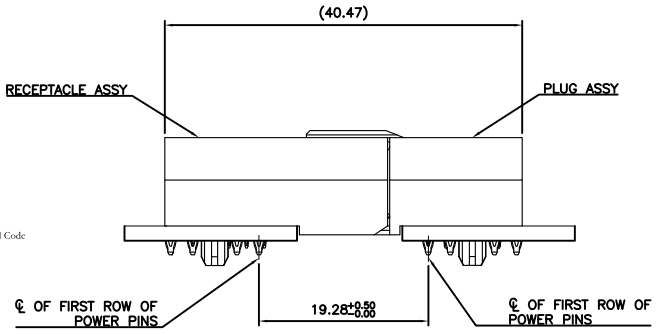

MATED PROFILE
(MATED WITH R/A RECEPTACLE ASSY)

Tolerances	Dwg. No.	9395-D0000-053	Title: 9395 Series Max P60 10mm Low Profile, 60Amp Plug, Right Angle,FMLB	OUPIIN ELECTRONIC(KUNSHAN) CO., LTD.
x = ±0.5	Projection			P/N: 9395-1D02S15D02B71PPG2A-A012
.x = ±0.25	Unit mm	Scale 1:1		SHEET 1/1 Ver. No. R2
.xx = ±0.15	Drawn By	XM 04/21'25		