REV.	SPECIFICATION	ECN NO.	APPD.
X3			

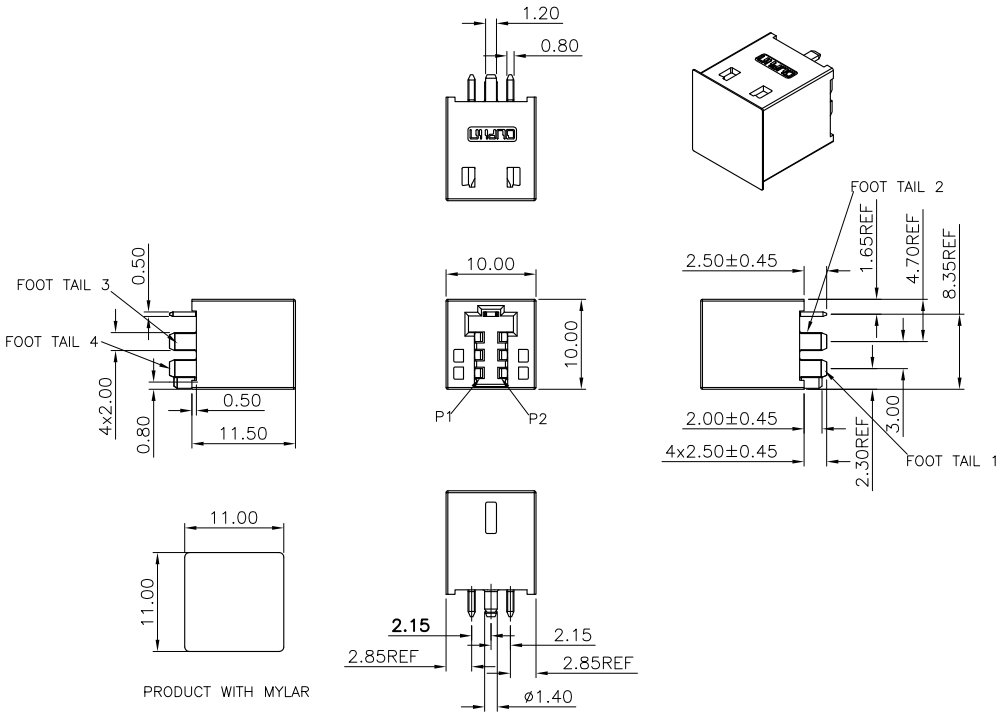

Material and Plating:

Housing: LCP, UL94V-0 , BLACK.

Power Contacts: High Conductivity Copper, 30u"Au+Pd/Ni on Contact Area and 80u" Min Tin Plated on Solder Tail over Nickel 50u" Min .

Lock:Brass.
80u" Min Tin Plated over Nickel 50u" min.

Electrical Characteristics:

Current Rating: Power Pin:40A.

Dielectric Withstanding Voltage:
Power Pin DC 1000V For 1 minute.

Insulator Resistance: Power Pin 1500MΩ min.

Contact Resistance: Power Pin 0.5mΩ max.

Operating Temperature: -40°C ~+85°C .

***RoHS Compliant**

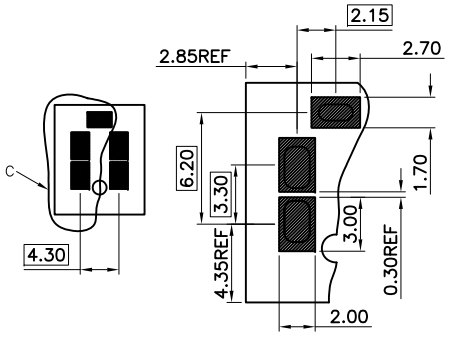

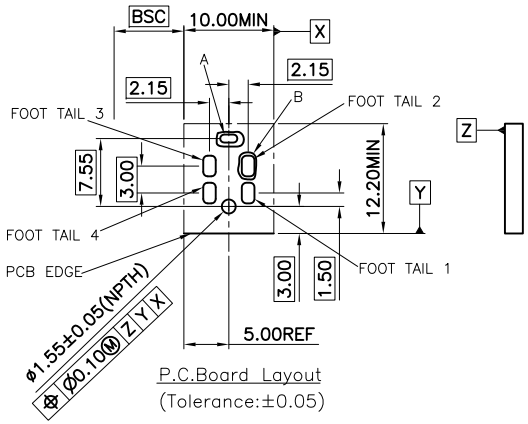

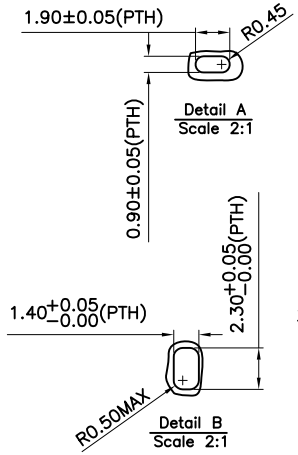

9312- 2 P02 B7 S T A01

- Series
- 2: Female Straight
- P02:Power Pin
- B7: 30u" Au+Pd/Ni
- S: Dip Type
- T: Tape & Reel Package
- A01:With Lock,With Mylar With post

Tolerances	Dwg. No.	9312-DP01-002	Title: 9312 Series	OUPIIN ELECTRONIC(KUNSHAN) CO., LTD.
x = ±1 .x = ±0.5 .xx = ±0.25 .xxx = ±0.10	Projection			P/N: 9312-2P02B7STA01
	Unit mm	Scale 1:1		SHEET 1/1 Ver. No. X3
	Drawn By	XS 11/03'25		