REV.	SPECIFICATION	ECN NO.	APPD.
R1	NEW	ECN251128	

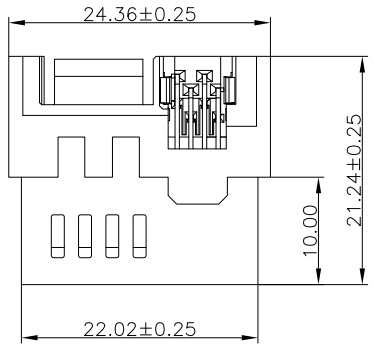

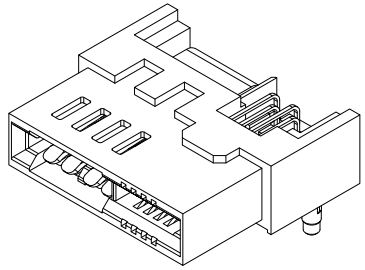

Material:

Housing: LCP,UL94V-0, Black.

Power Contacts: High Conductivity Copper .
30u"Au+Pd/Ni plated on Contact Area and 80u" Matte Tin Plated on Solder Tail over nickel 50u" under plated.

Signal Contacts: phosphor Copper .
30u"Au+Pd/Ni plated on Contact Area and 80u" Matte Tin Plated on Solder Tail over nickel 50u" under plated.

Electrical Characteristics:

Current Rating: Signal Pin: 1.5A.
Power Pin: 12.5A(UL), 7A(UL/CSA).

Dielectric Withstanding Voltage:
Signal Pin DC 500V For 1 Minute.
Power Pin DC 1000V For 1 Minute.

Contact Resistance: Signal Pin 25mΩ max.
Power Pin 0.6mΩ max.

Insulator Resistance: Signal Pin 500MΩ min.at DC 500V
Power Pin 5000MΩ min.at DC 500V

Operating Temperature: -55°C~+105°C.

***RoHS & HF Compliant**

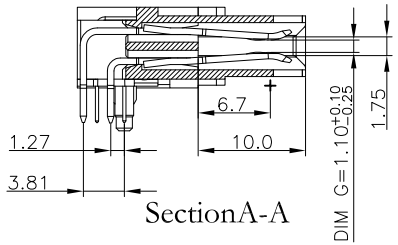

SectionA-A

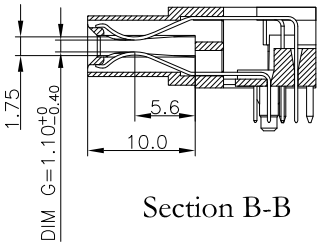

Section B-B

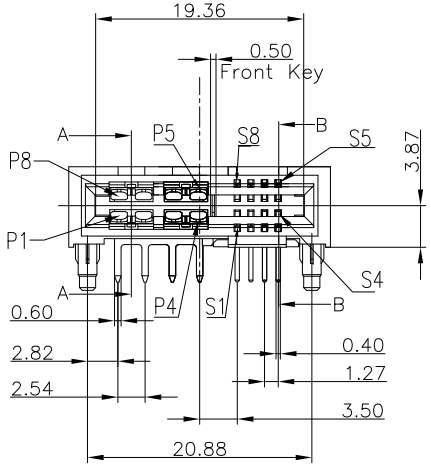

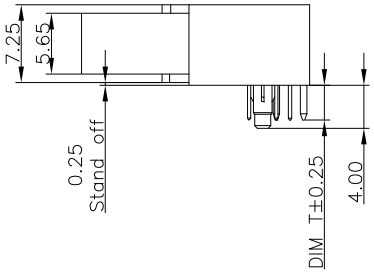

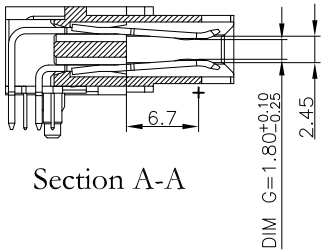

Section A-A

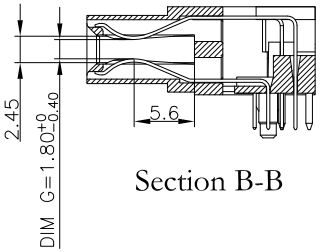

Section B-B

9302- 4 A18 S08 P 2 1 1 A CB30 D A

- Series
- 4:Female Right-angle
- A18 :8Power Pin
- S08:Signal Pin
- N:W/O Post
  P:With Post=4.00mm
  B:With Post=3.40mm
- 2: DIM T=2.60mm
- 1: DIM G(GAP)1.10mm
  2: DIM G(GAP)1.80mm
  Table A
- 1: With Front Key
- A :Signal Pitch 1.27
  B :Signal Pitch 2.54
- CB30: Contact Au+Pd/Ni,Dip Tin 30μ"
- D: Dip Type
- A: Tray Package

Tolerances	Dwg. No.	9302-D0000-038	Title: 9302 Series High power and signal edge Card connector	OUPIIN ELECTRONIC(KUNSHAN) CO., LTD.
x = ±0.50	Projection			P/N: 9302-4A18S08P211ACB30DA
.x = ±0.25	Unit mm	Scale 1:1		SHEET 1/2 Ver.No. R1
.xx = ±0.15	Drawn By	GYJ 11/15'25		

REV.	SPECIFICATION	ECN NO.	APPD.
R1	NEW	ECN251128	

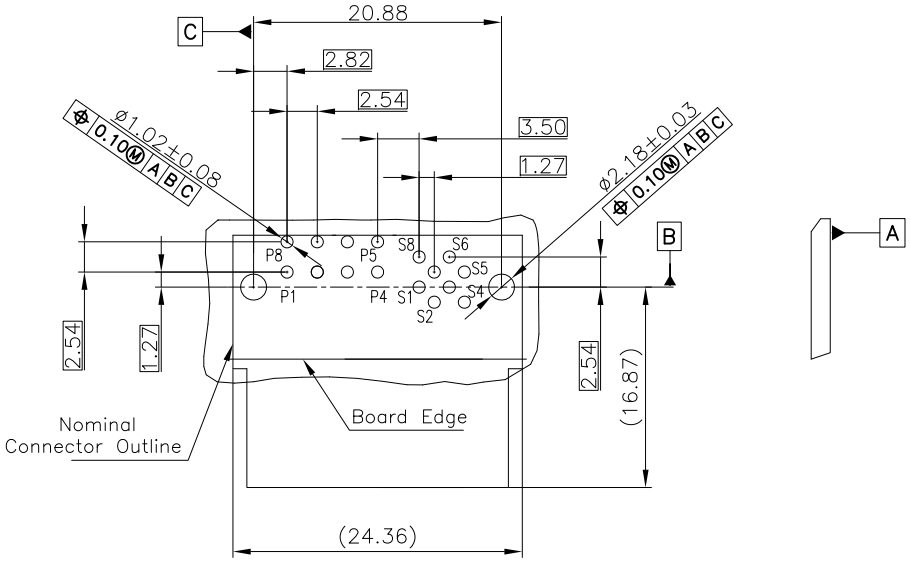

P.C.B Layout
(Tolerance:±0.05)

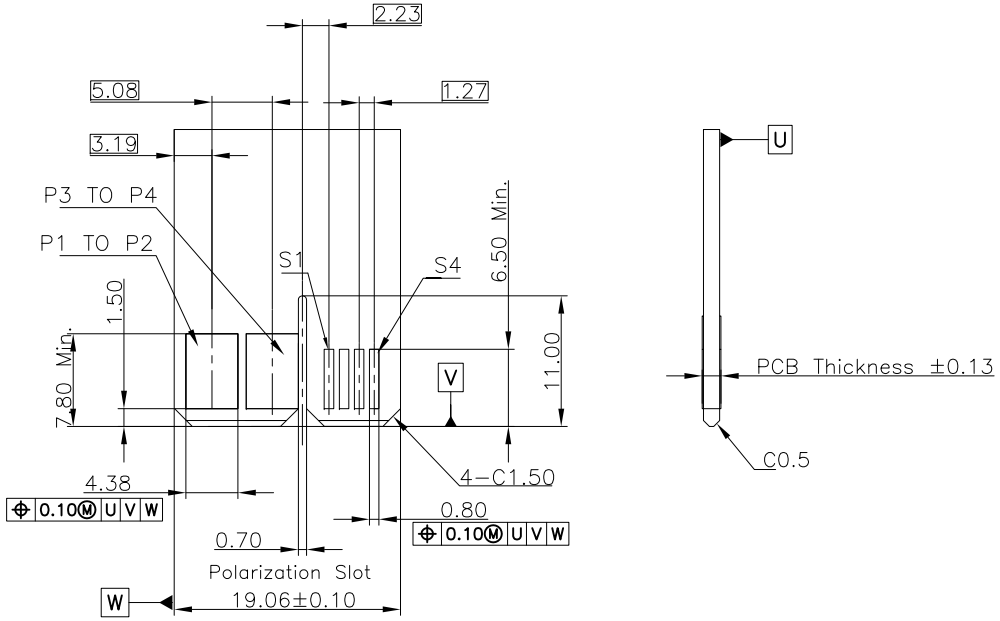

Recommended Mating Board Foot Print
(Tolerance:±0.05)

Table A	
Dim G	PCB Thickness
1.10	1.57
1.80	2.30

Tolerances	Dwg. No.	9302-D0000-038	Title:	OUPIIN ELECTRONIC(KUNSHAN) CO., LTD.
x = ±0.50 .x = ±0.25 .xx = ±0.15	Projection		9302 Series High power and signal edge Card connector	P/N: 9302-4A18S08P211ACB30DA
	Unit mm	Scale 1:1		SHEET 2/2 Ver.No. R1
	Drawn By	GYJ 11/15'25		