REV.	SPECIFICATION	ECN NO.	APPD.

Materlal:
Housing: PBT, UL94V-0, Black.
Contacts: Brass, Gold Plated over Nickel 50u".
Shell: Steel, 60u" Nickel Plated over 50u" copper.
Electrical Characteristics:
Current Rating: 5 AMP.
Dielectric Withstanding Voltage: AC 1000V.
Insulation Resistance: 1000MΩ min.
Contact Resistance: 20mΩ max.
Operating Temperature: -55°C~+105°C.
***RoHS Compliant**

Male

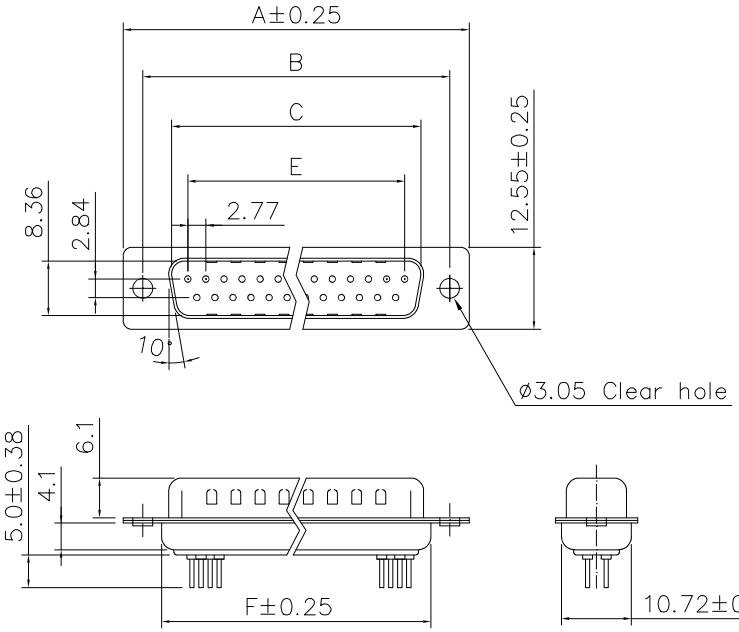

Female

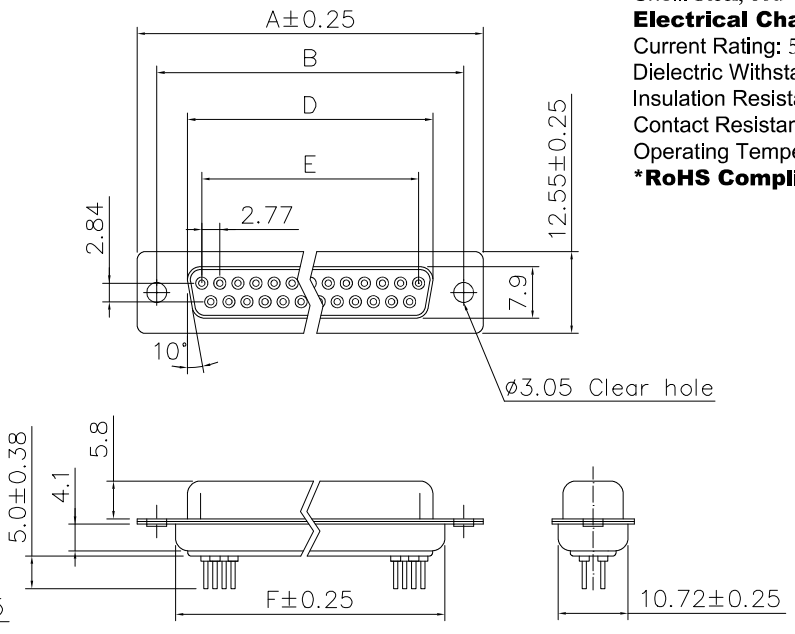

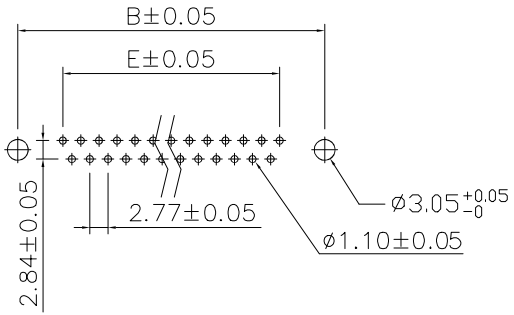

RECOMMENDED PCB LAYOUT

7905-A xx x T x G 00 N5 A

- Series: 7905-A
- Positions: xx
- M:Male / F:Female: x
- B:Black / U:Blue / W:White: x
- G: Gold Plated
- 00:Gold Flash
- N5: Machine Pin
- A: Tray Package

Positions	A	B	C	D	E	F
09	30.81	24.99	16.92	16.33	11.08	19.20
15	39.20	33.30	25.25	24.70	19.39	27.70
25	53.05	47.04	38.96	38.40	33.24	41.10
37	69.40	63.50	55.42	54.80	49.86	57.30

Tolerances	Dwg No.	S6420221129-05	Title: 7905-A Series D-SUB Straight Type
x. = ±0.38	Projection		
.x = ±0.25	Unit mm	Scale 1:N	
.xx = ±0.13	Drawn By	Martin 09/22'26	① 747

OUPIIN ELECTRONIC(KUNSHAN) CO., LTD.

P/N: 7905-AxxxTxG00N5A

SHEET	1/1	Ver.No.	X2