REV.	SPECIFICATION	ECN NO.	APPD.

Male

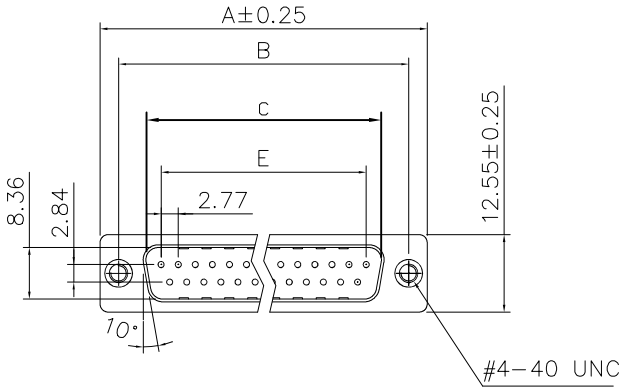

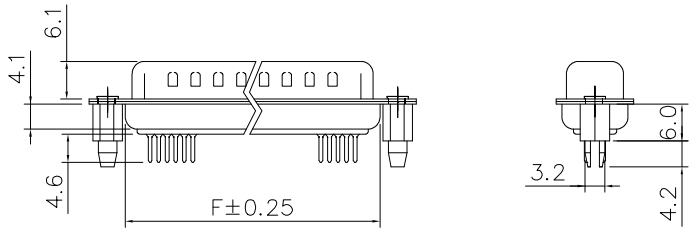

Female

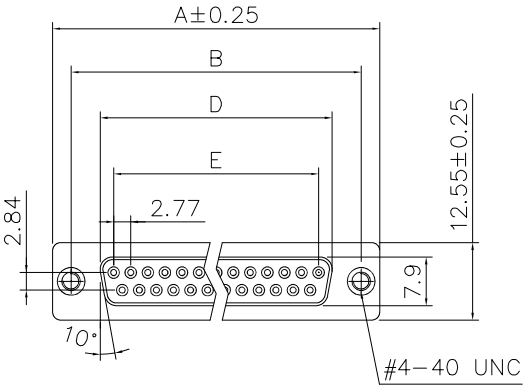

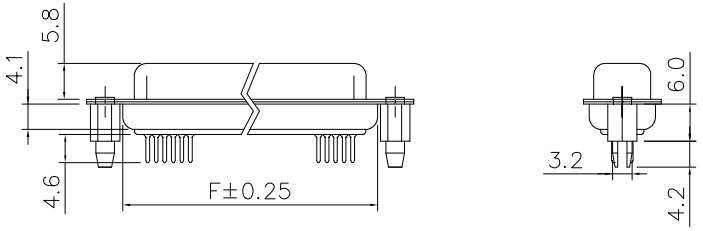

Material:
Housing: PBT, UL94V-0.
Contacts: Brass, Gold Plated on Contact Area and Gold Flash on Solder Tail over Nickel 50u".
Shell: Steel, 60u" Nickel Plated over Copper 50u".
Boardlock: Brass, Tin Plated.

Electrical Characteristics:
Voltage Rating: AC 250V.
Current Rating: 3 AMP.
Dielectric Withstanding Voltage: AC 1000V.
Insulator Resistance: 1000MΩ min.
Contact Resistance: 20mΩ max.
Operating Temperature: -55°C~+105°C.
***RoHS Compliant**

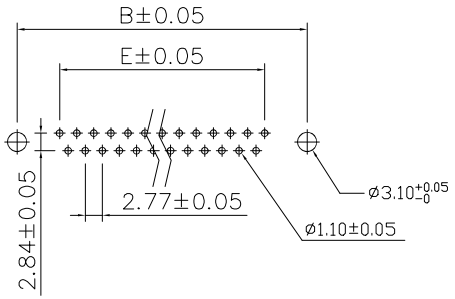

RECOMMENDED PCB LAYOUT

7905-A xx x T B G 00 N3 A

- Series
- Positions
- M:Male / F:Female
- B:Black / U:Blue / W:White
- G: Gold Plated
- 00:Gold Flash
- N3:With 4-40UNC Threaded Riveted Brackets(Board Lacks)
- A: Tray Package

Positions	A	B	C	D	E	F
09	30.81	24.99	16.92	16.33	11.08	19.20
15	39.20	33.30	25.25	24.70	19.39	27.70
25	53.04	47.04	38.96	38.40	33.24	41.10
37	69.40	63.50	55.42	54.80	49.86	57.30

Tolerances	Dwg. No.	S3220230424-02	Title: 7905-A Series D-SUB Straight Type	OUPIIN ELECTRONIC(KUNSHAN) CO., LTD.
x. = ±0.38 .x = ±0.25 .xx = ±0.13	Projection			P/N: 7905-AxxMTBG00N3A& 7905-AxxFTBG00N3A
	Unit mm	Scale 1:N		SHEET 1/1 Ver.No. X1
	Drawn By	Martin 04/24'23	① 747	