REV.	SPECIFICATION	ECN NO.	APPD.

Materlal:
Housing: PBT, UL94V-0, Black.
Contacts: Brass, Gold Plated over Nickel 50u".
Shell: Steel, 60u" Nickel Plated over 50u" copper.

Electrical Characteristics:
Current Rating: 5 AMP.
Dielectric Withstanding Voltage: AC 1000V.
Insulation Resistance: 1000MΩ min.
Contact Resistance: 20mΩ max.
Operating Temperature: -55°C~+105°C.
***RoHS Compliant**

Male

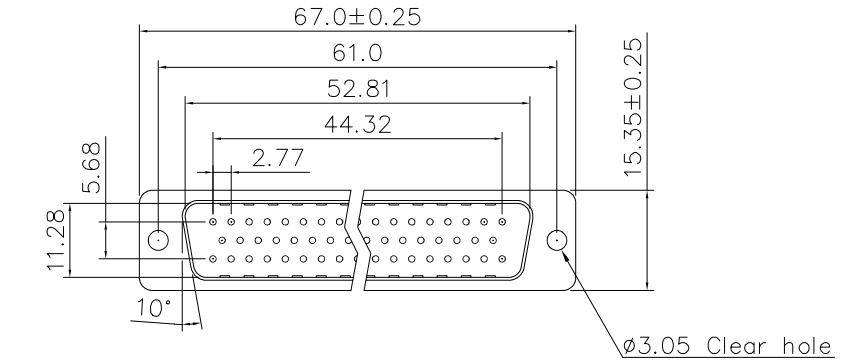

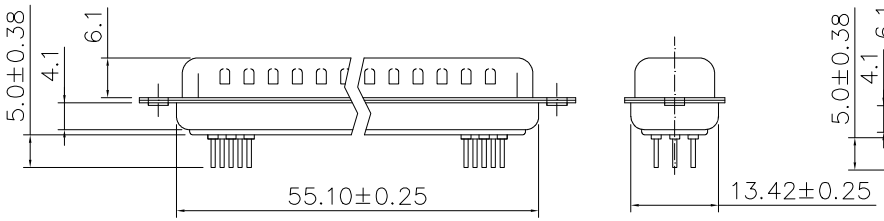

Female

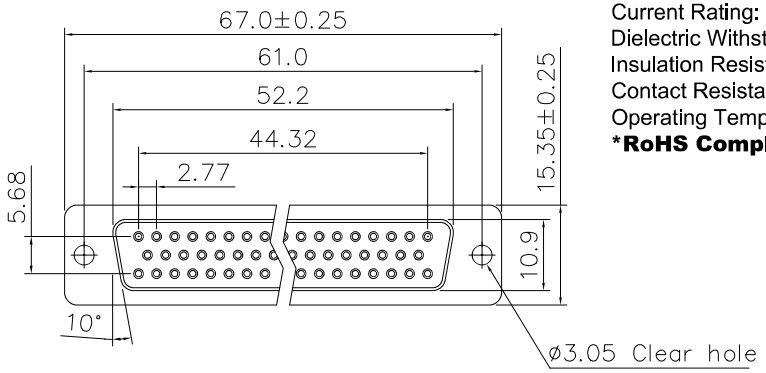

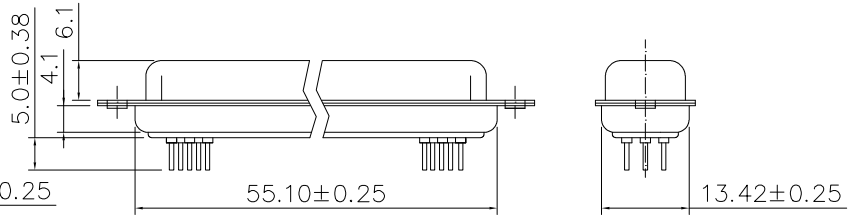

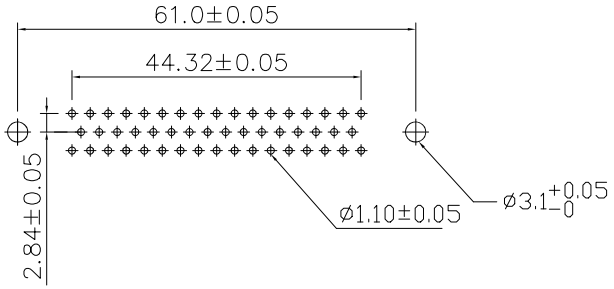

RECOMMENDED PCB LAYOUT

7905-A 50 x T x G 00 N5 A

- Series: 7905-A
- Positions: 50
- M:Male / F:Female: x
- B:Black / U:Blue / W:White: T
- G: Gold Plated: G
- 00:Gold Flash: 00
- N5: Machine Pin: N5
- A: Tray Package: A

Tolerances	Dwg No.	S6420221129-07	Title: 7905-A Series D-SUB Straight Type
x. = ±0.38 .x = ±0.25 .xx = ±0.13	Projection		
	Unit mm	Scale 1:N	
	Drawn By	Martin 09/22'26	① 747

OUPIIN ELECTRONIC(KUNSHAN) CO., LTD.

P/N: 7905-A50xTxG00N5A

SHEET	1/1	Ver.No.	X2